SPECIFICATION

IMAGE FORMAT	1"
FOCAL LENGTH	70mm
H F.O.V.	10°
RESOLUTION	8MP
DISTORTION	0.1%
APERTURE	F1.8
MOUNT	C
IRIS	Manual
FOCUS	Manual
ZOOM	Manual
B.F.L.	15.45mm
M.O.D.	3m

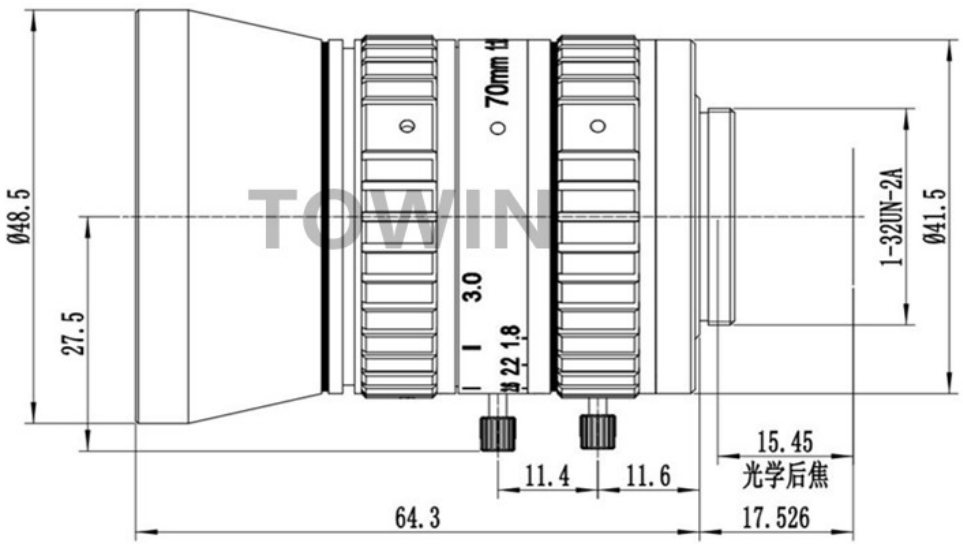

SCALE		DRAWN		MODEL	C701118M8	REV	DESCRIPTION	DATE	NAME
DATE		CHECK		香港致远电子集团有限公司 HONGKONG TOWIN ELECTRONICS CO.,LTD.		①			
UNIT	mm	APPROVE				②			
						③			